Compact Models for Smart Pixels with Smart Illumination

Y. Subramanian, M. Azadeh and R. B. Darling

University of Washington, Department of Electrical Engineering,
Box 352500, Seattle, WA 98195

ABSTRACT

Smart Pixels with Smart Illumination (SPSI) is a recently developed technology that enables the monolithic integration of two functionalities-optical illumination and detection- into arrays of optoelectronic 'pixels' in a compact and robust manner. To facilitate the design and analysis of systems involving SPSI technology using network simulators, this paper presents and validates a block-diagram approach to construct compact models for the individual SPSI pixels. In addition, the utility of such models is demonstrated through simulations of a potentially new application of SPSI technology-edge detection.

Keywords: optoelectronics, SPSI, compact model, optical interconnects.

1 INTRODUCTION

The terminology 'Smart Pixel' originated from the monolithic integration of electronic circuitry and optical detectors. Issues involving external illumination of the object being detected in Smart Pixel Arrays (SPAs) motivated the development of SPSI technology [1,2] in which the functionality of illumination is additionally integrated into the chip using electro-optic sources (e.g. LEDs or LASERs). In SPSI, the inherent nonlinearity of sources and detectors as well as the significant variation in behavior from pixel to pixel may be linearized and stabilized by the use of feedback in the electronics and/or optics, as shown in Fig. 1.

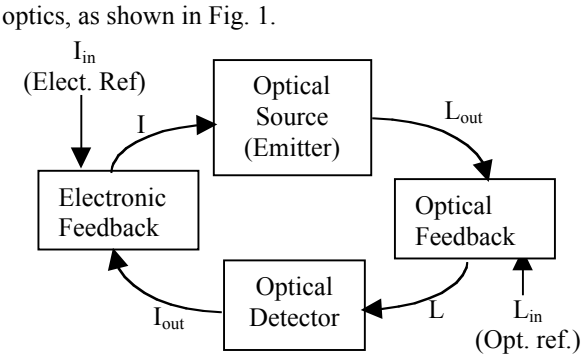

Fig.1 Schematic of a SPSI Pixel.

2 BLOCK-DIAGRAM APPROACH

In order to represent a SPSI array in a network simulator, it is necessary to represent individual SPSI elements in a manner that enables the inclusion of all possible interactions among pixels in the array. A simple approach to do this is to represent individual SPSI pixels using the block diagram shown in Fig. 2, and arrays of SPSI pixels using the more general block diagram shown in Fig. 3. Table 1 gives descriptions of the symbols used in Figs. 2 and 3. (Their associations with the SPSI functionalities of Fig.1 may be noted.)

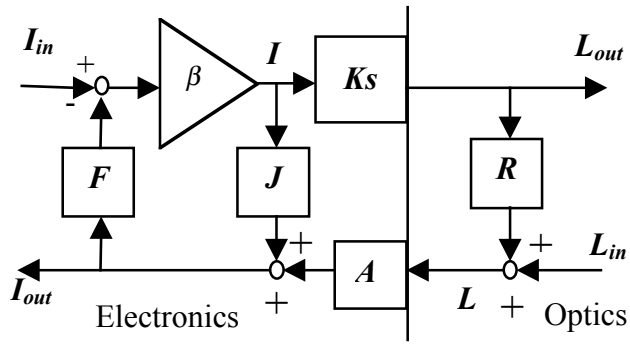

Fig. 2: Block Diagram representation of an individual SPSI Pixel.

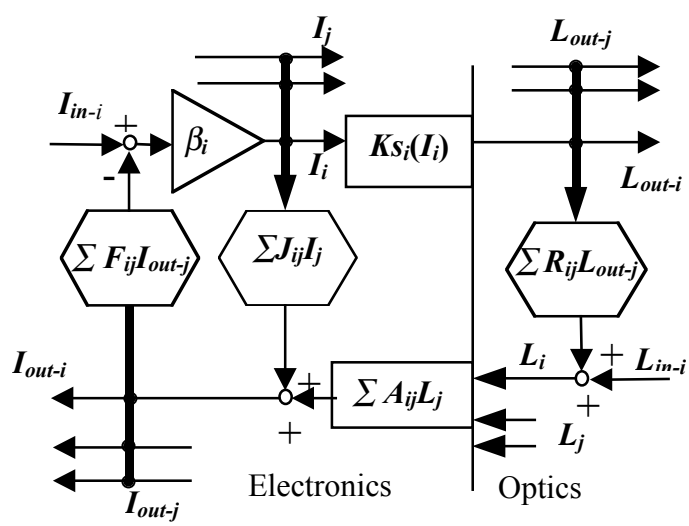

Fig. 3: Block Diagram representation of a SPSI Pixel Array.

Symbol	Description
I_{in}	Reference input to electronic feedback circuit (See Fig. 1)
I_{out}	Detector output
L_{in}	Reference input to optical feedback element (e.g. external illumination) (See Fig. 1)
L_{out}	Emitter output
Ks	Emitter gain
β	Open loop gain of electronic amplifier
F	Feedback factor from detector output to electronic amplifier input
J	Factor representing current leakage from emitter output to detector input
A	Detector gain (linear)
R	Optical feedback factor (reflectivity of the object)
Subscripts i,j in Fig. 3.	Denote association of the symbols in Fig. 2 with the i_{th} and j_{th} SPSI pixels in the SPSI array of Fig. 3.

Table 1. Symbols used in Figs 1, 2 and 3.

3 SABER IMPLEMENTATION

The block diagrams of Figs. 2 and 3 are implemented in Saber by creating and interconnecting instances from a library of simple input/output blocks (corresponding to the primitive blocks in Figs 2 and 3) modeled (using MAST) in a linear or piecewise linear fashion. Additionally, a time-delay block (with a small but arbitrarily fixed time-constant τ_D) is included in the primary loop of every pixel, as shown in Fig. 4. The purpose of this block is to ensure that the numerical calculation of nodal variables in the loop proceeds in the correct sequence during simulation. A SPSI network may be parameterized by the set of constants (i.e. the 'gains' and 'factors' in Table 1) associated with the transfer functions of the blocks in the network.

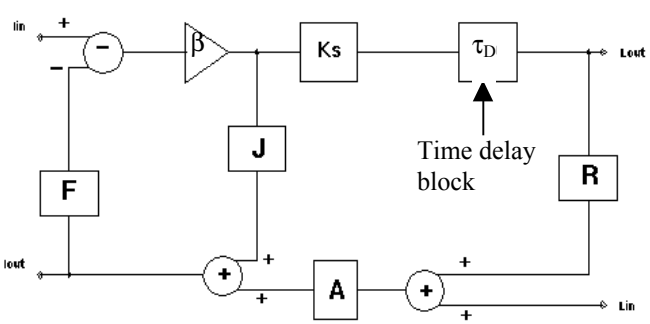

Fig. 4. Saber implementation of a SPSI Pixel.

4 PARAMETER EXTRACTION

Table 2 lists the parameters for a single SPSI-pixel model and their values as extracted. In table 2:

(i) Ks, J and A are related to the behavior of the emitter and detector (see Table 1), and were extracted through direct measurements on a pixel in a physical Vertical Cavity Surface Emitting Laser (VCSEL) / Metal–Semiconductor-Metal (MSM) Detector array (shown in Fig. 5)[1]. The emitter gain, Ks is nonlinear, and has been modeled in a PWL fashion using 3 lines. The slopes of the first and third line are assumed to be zero and the first line is assumed to pass through the origin. The three titles under Ks in table 2 represent the x-coordinate of the point of intersection of the first and second lines, the slope of the second line and the y-coordinate of the point of intersection of the second and third lines in that order.

(ii) F and β are related to the behavior of the electronic feedback circuit between the detector output and emitter input (see Table 1). They are determined directly from the circuit used in a given application. Their values in Table 2 correspond to the circuit used in the physical optical flip-flop described in section 5.

(iii) R is a function of the reflectivity of the surface of the object (see table 1). Its value in table 2 corresponds to the reflectivity of a calibrated reflective surface used to realize the physical optical flip-flop. R may also be used as an input (instead of a parameter) in applications where the reflectivity of the object is being sensed.

Parameter	Value	Units
Ks*		
- Threshold Cur.	10	MA
- Gain	4.3×10^{-2}	μW/mA
- Sat. output	95	μW
J	2.7×10^{-5}	-
A	0.3	A/W
R	0.09	-
F	-5.24	-
β	500	-

Table 2: Default values for the model of a single SPSI pixel.

[1] We thank the Consortium for Optical and Optoelectronic Technologies in Computing (CO-OP), Honeywell Inc., and DARPA for providing the VCSEL/MSM arrays.

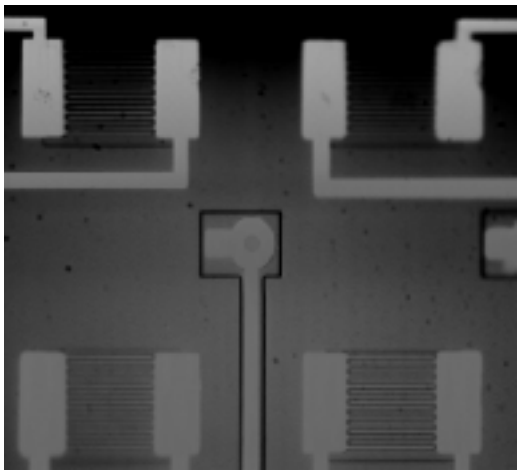

Fig. 5: Photograph of the physical VCSEL /MSM detector array.

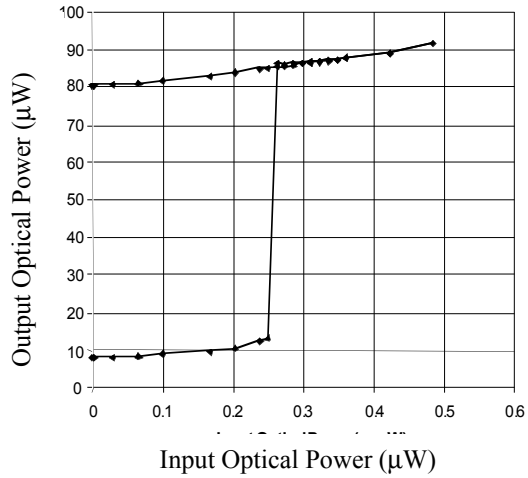

Fig. 6. Hysterisis in the physical optoelectronic flip-flop

5 MODEL VALIDATION USING AN OPTOELECTRONIC FLIP-FLOP

A potentially useful application of SPSI technology is an optoelectronic flip-flop with an optical 'output' and an optical 'set' function. Such a flip-flop could be realized when the optical reference input of a pixel L_{in} and detector output L_{out} (See Table 1) act as the flip-flop's 'set' and 'output' terminals respectively and positive electronic feedback is used between the detector and emitter. In such an arrangement, L_{out} could increase rapidly (until the emitter saturates) when the 'set' input L_{in} is increased to a sufficient level. Once the emitter reaches saturation, the gain in the detector-electronics-emitter-optics loop could sustain the emitter output in saturation even if the optical 'set' input is subsequently decreased to zero. The flip-flop may be 'reset' from this state using a negative pulse on the reference input to the electronic circuit, I_{in} (See Table 1). As mentioned in section 4, a physical flip-flop was realized using the values of F, β, and R in Table 2. Fig. 6 shows the 'hysteresis' observable in the optical 'output' of the flip-flop when the optical 'set' input is increased and subsequently decreased. Fig. 7 shows the corresponding Saber simulation using the block-diagram model with parameter values from Table 2. Figures 6 and 7 demonstrate the validity of the block- diagram approach.

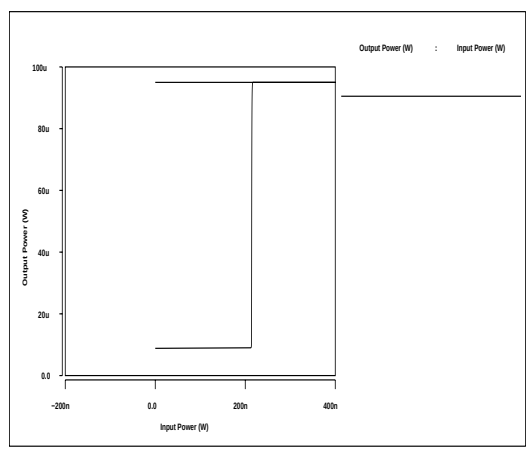

Fig. 7: Saber simulation of SPSI flip-flop , showing hysteresis

6 SPSI IN IMAGE PROCESSING

Another potential application of SPSI technology is in image processing. The most basic image-processing application would consist of an array of non-interacting SPSI pixels that respond linearly to the reflectivity of the surface illuminated by them. At a higher level, the array could be sensitized to the spatial derivative of the reflectivity of the surface it illuminates by modifying the electronic feedback scheme to make the input of each emitter directly-related to the difference between its own output and the output of the emitters surrounding it. Such an edge-detection scheme is illustrated in a two-pixel SPSI array in Fig. 8.

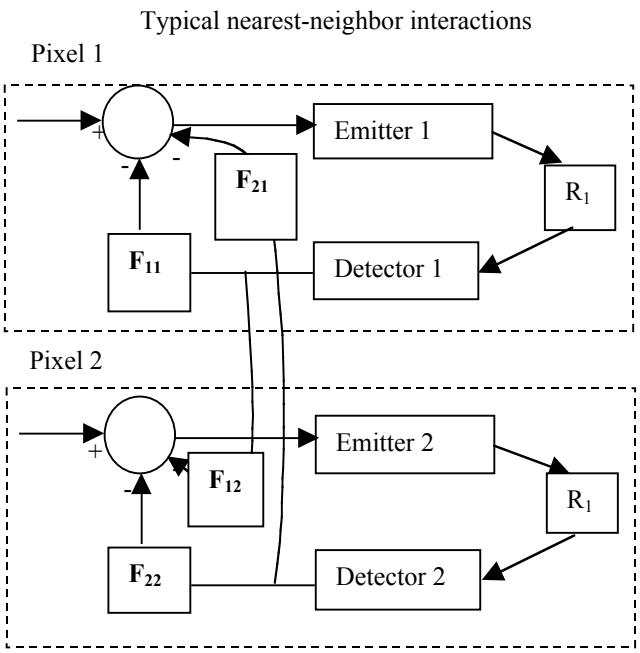

Fig. 8. SPSI edge-detector feedback scheme for a two-pixel 'array'

Simulations of edge detection using a 3-pixel linear array are shown in Fig. 9.

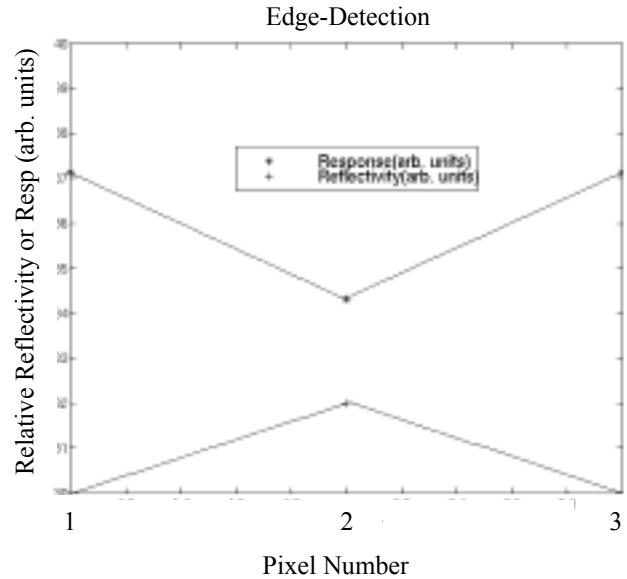

Fig. 9. Simulation showing spatial response varying with reflectivity in a 3-pixel SPSI Array.

7 CONCLUSIONS

A block-diagram approach to construct compact models for SPSI arrays is presented. This approach includes all the significant aspects of behavior of SPSI pixels, and enables the simulation of large, arbitrarily interconnected SPSI arrays in network simulators. Compact models to enable the construction of arbitrary SPSI networks in Saber have been implemented in MAST and extracted through open-loop measurements. They have been validated by comparing Saber simulations of an optoelectronic SPSI flip-flop with its physical counterpart. Additionally, edge-detection as applicable to image processing has been demonstrated through simulation in Saber. They should serve as a powerful tool for the design and analysis of complex systems (including systems involving guided optical wave propagation) involving SPSI technology.

REFERENCES

[1] W.R. Babbitt and R.B. Darling, "Efficient Optical Sensor Design for Multi-Function Integrated Emitter-Detector Arrays", in *Optics in Computing*, Vol.8, pp. 61-63, 1997 OSA Tech Digest Series, Washington, DC, 1997.

[2] M. Azadeh, W.R. Babbitt and R.B. Darling, “Smart Pixels with Smart Illumination”, *Optics Letters*, May 98, vol. 23, no. 10, pp. 786-788, May 1998.