Surface Modification of Cp-Titanium by Plasma Polymerization of Acrylic Acid

G. S. Kim[**], B. H. Kim[*], S. J. Park[*], D. L. Cho[**], H. J. Park[**], J. R. Jung[***], S. H. Ohk[***], Y. M. Ko[****]

[*] Department of Dental Materials, College of Dentistry, 2nd stage of BK21, Chosun University, 375 Seo-suk dong, Dong-gu, Gwang-ju, Korea, kim5055@chosun.ac.kr

[**] Faculty of Applied Chemistry, 2nd stage of BK21, Chonnam National University, Gwangju, Korea, dlcho@chonnam.ac.kr

[***]Department of Oral Microbiology, 2nd stage of BK21 for dental school, Chonnam National University, Gwangju, Korea, shohk@chonnam.ac.kr

[****]Department of Dental Materials and Test and Evaluation Center for Dental Instruments and Materials, College of Dentistry, 2nd stage of BK21, Chosun University, 375 Seo-suk dong, Dong-gu, Gwang-ju, Korea, ymgo@chosun.ac.kr

ABSTRACT

Titanium is used as biomaterial in dental, orthopaedic and cardiovascular fields and surface characteristics such as the chemistry, surface charge and the topography of the material surface, influence biological performance. The aim of this study was to determine the effect of plasma polymerization treatments of commercially pure (cp) titanium (Ti) samples surface on properties of acrylic acid films. Cp titanium sheet (15 mm x 15 mm) was used to two different surface treatments, including, etching with an HCl/H_2SO_4 solution and non-treated bare Ti sheet. To improve the adhesive strength of AA films, we carried out two step plasma deposition process. The first step was treated by 80W for 5 min and then second step was performed by 20W-60W for 20 min. Fourier transform infrared (FTIR) was used to study the effect of second step plasma power on the structure of the AA films. The peak of C=O intensifies as the plasma power at 30 W, indicating a strong plasma power dependence. The content of carboxyl groups were evaluated by toluidine bule O (TBO) assay and contact angle. These results showed that acid etched Ti sample displayed lower contact angle (32°) and more carboxyl group. The surface topography of samples was analyzed by using scanning electron microscopy (SEM). SEM images showed that thin film of the AA layer (800 nm) was uniformly deposited on the cp Ti surfaces. These results suggest that plasma polymerization treatment for cp-Ti may improve hydrophilicity and have functional group. This behavior suggests a possibility of a further favorable Ti implant.

Keywords: Plasma polymerization, Acrylic acid, Titanium

1 INTRODUCTION

Titanium is a well-known biocompatible material, successfully used for the manufacturing of prostheses and dental implants. Many surface modifications have been proposed to improve the osseointegration of titanium. Plasma treatment is currently used in surface and interface engineering for improving adhesion, hydrophobicity, hydrophilicity, printability, corrosion resistance, selectivity, or for surface etching or cleaning [1–3]. The main principle of the plasma technique is that the ionized and excited molecular radicals created by the electrical field bombard and react on the surface of the substrate. These ions and radicals may etch, sputter, or deposit on the substrate surface. As a result, the surface properties of substrates are modified. The plasma technique is a room temperature and environmentally benign process. Due to these characteristics, the plasma technique can be used for surface modification and thin film deposition on almost all substrates, including metal and alloy plates, polymer films, paper, glass, porous materials, and particulate matter. The physical and chemical properties of plasmas depend on many variable; chemistry, flow rate, distribution, temperature, and pressure of gases. Additionally, rf excitation frequency power level, reactor geometry, and electrode design are equally important. Polymer-based biomaterials are used extensively for cellular studies and tissue engineering. In most circumstances, the polymer materials are subjected to surface modification or functionalization in order to give them the necessary surface characteristics, or to introduce functional groups, allowing other biomolecules to be attached to the surface. Grafting poly (acrylic acid) (PAA) to polymeric surfaces is a convenient and widely used technique for these purposes [4–7]. This technique can be used as a platform for surface modification/ functionalization for many biological applications since most biomolecules can be conjugated to surfaces through reactions with carboxyl groups (–COOH) on the PAA chains [8,9]. PAA-grafted surfaces per se can also be used as substrates for cell culture because of their improved wettability [10–12]. The purpose of the this study was to investigate conditions of plasma polymerization process for deposition of AA polymer thin films on the cp titanium surface.

2 MATERIALS AND METHODS

2.1 Materials

Commercially pure titanium sheets (15 mm x 15 mm) were used as the substrate. These surfaces were ultrasonically degreased in acetone and ethanol for 15 min each, with deionized water rinsing between applications of each solvent. All Ti sheets were treated to two different surface treatments, including, etching with an HCl/H_2SO_4 solution and non-treated bare Ti sheet.

2.2 Plasma polymerization

The plasma-coating reactor is a homemade system. The schematic diagram of the plasma reactor for AA thin film deposition is shown in figure 1. It consists mainly of a radio frequency (rf) source, the glass vacuum chamber, and press gauge. The vacuum chamber of plasma reactor has a long Pyrex® glass column about 50 cm in length and 10 cm in internal diameter.

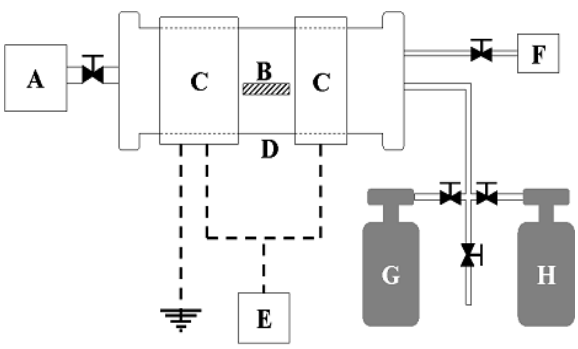

Figure 1 Schematic diagram of the plasma reactor
A: vacuum pump, B: sample, C: electrode, D: chamber
E: R.F generator, F: pressure gauge, G, H: gas

Monomer was used acrylic acid. To improve the adhesive strength of AA films, we carried out two step plasma deposition process. The first step was treated by 80W for 5 min and then second step was performed by 20W-60W for 20 min. Fourier transform infrared (FTIR) was used to study the effect of second step plasma power on the structure of the AA films.

2.3 Contact angle

Contact angles were subtended by water drops on the flat specimen surface, and the contact angles of these drops were measured using a goniometer. Five samples were analyzed.

3 RESULTS AND DISCUSSION

FTIR was used to investigate the effect of plasma power on the structure of the AA films. Figure 2 shows the FTIR spectrum of AA coated cp-titanium.

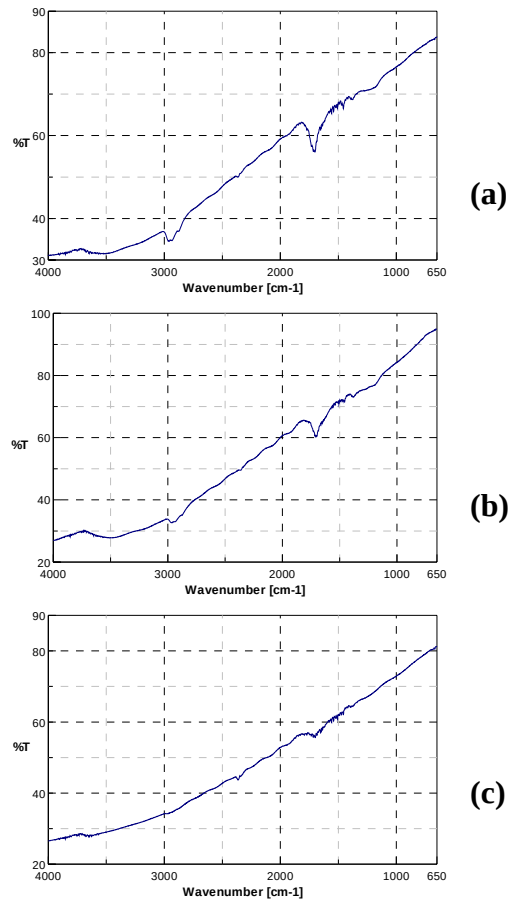

Figure 2 FTIR spectra of as AA-coated cp-titanium at different plasma powers. (a) 30W, (b) 40W, (c) 50W

As can be seen in Figure 2 (a), the strong C=O peak near 1700 cm^{-1} indicates AA thin film on the titanium. The peak of C=O intensifies as the plasma power decreases up to 60W. This results indicate that C=O intensification is depend on plasma power. To investigate the AA film solubility in PBS (phosphate buffer solution), all samples were immersed to PBS for 60min. After immersing, the all samples were dried, and the FTIR analysis was again performed. In the case of plasma power 20W and 60W, the AA film is entirely soluble. When the 30W and 40W plasma power was performed, AA film was remained. This result indicates cross links exit in the polymer.

Figure 3 shows the SEM images of the cp-titanium surface and AA thin film coated titanium surface. As seen in the photograph, the AA thin film was uniformly deposited on titanium surface.

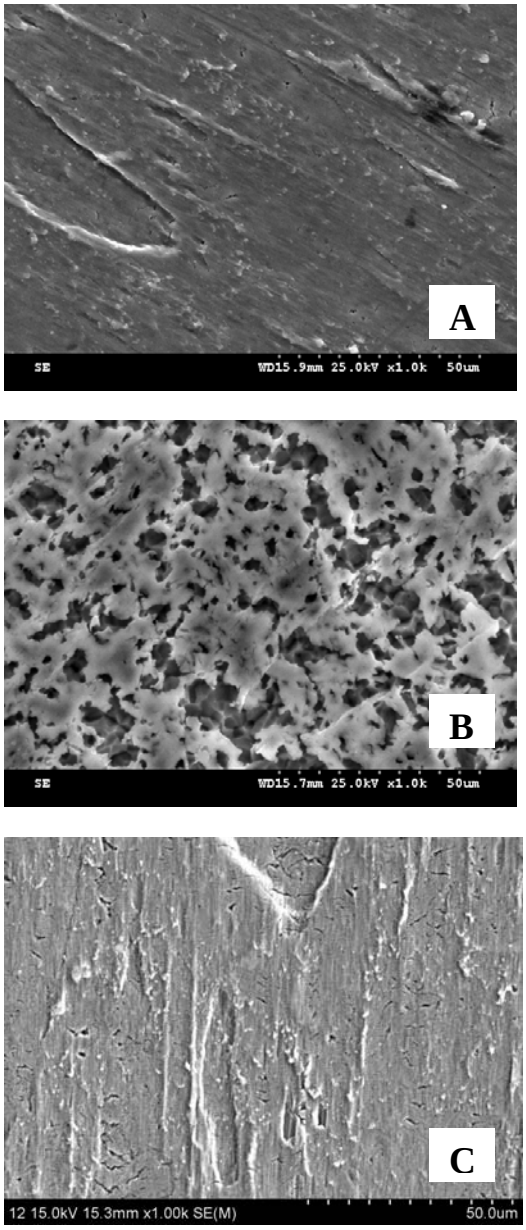

Figure 3 SEM images of cp-titanium surface (A), acid treated titanium surface (B) and AA film coated titanium surface (C)

To evaluate coated surface hydrophilicity, we have measured contact angle. Pure titanium surface have 75 degree of contact angle. The contact angles measured on AA film coated titanium surface at different plasma power were summarized in table 1. Contact angles for plasma power 20W, 50W and 60W were observed to be significantly higher when compared to 30W and 40W.

Plasma processes are useful method for modifying biomaterial surfaces. Plasma modifications have been frequently used for altering the surface properties of polymers, for example, by crosslinking or depositing specific functional groups. Metals can also be readily modified by plasma techniques for the purpose of cleaning or altering cell adhesiveness.

In the present work, titanium surfaces with high densities of carboxyl groups were obtained by varying the reaction conditions during plasma treatment with AA polymer.

Table 1. Contact angle of AA coated titanium surface as a function of plasma power

Run	Plasma power (W)	Contact angle (^{o})
1	20W	62
2	30W	38
3	40W	42
4	50W	49
5	60W	58

4 CONCLUSIONS

Plasma polymerization of acrylic acid was used to provide functional groups for improvement of titanium surface. The effect of plasma power on the structure of the AA film was studied by FTIR experiments. The results of FTIR analysis indicated that the cross-links were enhanced at 30W. These results are promising, and the application will be focused on immobilizing bioactive molecules on metal materials surfaces.

REFERENCES

[1] S. Eufinger, W.J. van Ooij and T.H. Ridgway, J. Appl. Polym. Sci. 61, 1503, 1996.
[2] W.J. van Ooij, S. Eufinger and T.H. Ridgway, Plasma and Polymers 1**,** 231, 1996.
[3] W.J. van Ooij, P. France and J. Wevers, (P&G), U.S. Patent Application, July, 1998.
[4] J.H. Lee, H.W. Jung, I.K. Kang and H. B. Lee, Biomaterials 15, 705, 1994.
[5] Y.B. Zhu, C. Y. Gao and J. C. Shen, Biomaterials 23, 4889, 2002.
[6] B. Gupta, C. Plummer, I. Bisson, P. Frey and J. Hilborn. Biomaterials 23, 863, 2002.
[7] A. Bruil, JGA. Terlingen, T. Beugeling, WG. van Aken and J. Feijen. Biomaterials;13, 915, 1992.
[8] B. Li, Y. X. Ma, S. Wang and PM. Moran Biomaterials 26, 487, 2005.

[9] JMS Cabral and JF. Kennedy. In: Taylor RF, editor. Protein immobilization: fundamentals and applications. New York: Marcel Dekker, Inc., 73–138.1991.
[10] van Kooten TG, Schakenraad JM, van der Mei HC, Busscher HJ. Biomaterials 13, 897, 1992
[11] Haddow DB, Steele DA, Short RD, Dawson RA, MacNeil S. J Biomed Mater Res. 64A, 80, 2003.
[12] Daw R, Candan S, Beck AJ, Devlin AJ, Brook IM, MacNeil S, Dawson RA, Short RD. Biomaterials 19, 1717, 1998.