Low Cost Vibration Measuring Device Using MEMS Accelerometer

Jagadeesh. P[*], M. Umapathy[**], S. Balachandar[***], M. Arumugam[****], and S. Ramaswamy[*****]

[*]Larsen & Toubro Limited, e-Engineering Solutions, NH No.8, Chhani
Baroda-391740, Gujarat, India, Cell: +91 9898336977, jagadeeshpandiyan@yahoo.co.in
[**]Department of Instrumentation & Control Engineering, National Institute of Technology
Tiruchirappalli-620015, Tamilnadu, India, umapathy@nitt.edu
[***]Department of Electronics & Communication Engg, Arunai Engineering College
Tiruvannamalai-606603, Tamilnadu, India, balachandar_ss@yahoo.co.in
[****]Director R&D, Arunai Engineering College, Tiruvannamalai-606603
Tamilnadu, India, arumugamaec@yahoo.com
[*****]Department of Electrical & Electronics Engineering, N P A Centenary Polytechnic
Kotagiri-643217, Tamilnadu, India, rams_npacpt@yahoo.co.in

ABSTRACT

This paper presents the overall design of an industrial vibration transmitter using MEMS capacitive accelerometer. It describes the accelerometer sensor interfacing circuit, rms-to-dc converter, voltage to current loop converter circuit design, calibration procedure, and mounting methods. The industrial vibration transmitter output can be customized to obtain either acceleration or velocity with root mean square (rms) or peak (pk) value signal. The output of the transmitter is a current signal (4-20mA) which is proportional to input acceleration (0-10g rms). The AC coupling circuit for accelerometer sensor interfacing, RMS detector and industrial current loop converter circuit are implemented in a single printed circuit board. The prototype consists of 2 pin top connector for power input (24VDC), current output signal and stainless steel mechanical housing assembly with bottom thread connection for mounting. The loop powered acceleration vibration transmitter is employed for vibration monitoring and control applications.

Keywords: MEMS, vibration transmitter, accelerometer, condition monitoring, current loop converter

1 INTRODUCTION

In recent years, machine condition monitoring system is becoming increasingly effective and sophisticated. The condition monitoring techniques mainly rely on the continuous or periodic monitoring of machine vibrations. Vibrations must be converted to an electrical signal which is performed by vibration transducers. The four types of transducers commonly used for vibration measurement are displacement, velocity or acceleration transducers and tachometer. The selection of the right type transducer, location & installation are the key considerations in obtaining a signal that accurately represents the vibrations. Vibrations are measured perpendicular to the surface when the transducer is mounted on the machine. Accelerometers are the most popular general purpose vibration transducers.

The modern condition monitoring systems are employing a new family of sensors called micromachined accelerometers. Micromachining refers to the technique of manufacturing tiny moving mechanical structures out of silicon and other materials. Some of the IC manufacturing techniques such as deposition, photolithography and etching are employed for making micromachined devices. The new accelerometers include both the signal conditioning circuitry and the sensor, fabricated together on a single monolithic chip at very low cost with high reliability.

2 MEMS ACCELEROMETER

Micomanufacturing processes are capable of creating three dimensional structures in silicon material. The classification of major micromachining techniques are bulk micromachining, surface micromachining, dissolved wafer process, LIGA, and Electro discharge machining. The MEMS devices can be realized by using any of these micromachining techniques. Bulk micromachining is based on a combination of isotropic and anisotropic etchings of silicon to form mechanical structures from the bulk of existing material. Surface micromachining is based on the sequential deposition and etching of thin films on the surface of a carrier substrate. The fabrication technique uses standard integrated circuit (IC) manufacturing techniques enabling all the signal processing circuitry to be combined on the same chip with the sensor.

The ADXL150 is a single axis accelerometer with signal conditioning on a single monolithic IC from Analog Devices, Inc. The ADXL 150 was fabricated using surface micromachining and BiMOS processes. The sensor element is made by depositing polysilicon (2.0µm) on a 1.6µm thick sacrificial oxide layer (B) that is then etched away leaving

the suspended sensor elements (C); thus resulting in three dimensional structures suspended above substrate (A) and free to move in three dimensions as shown in figure 1.

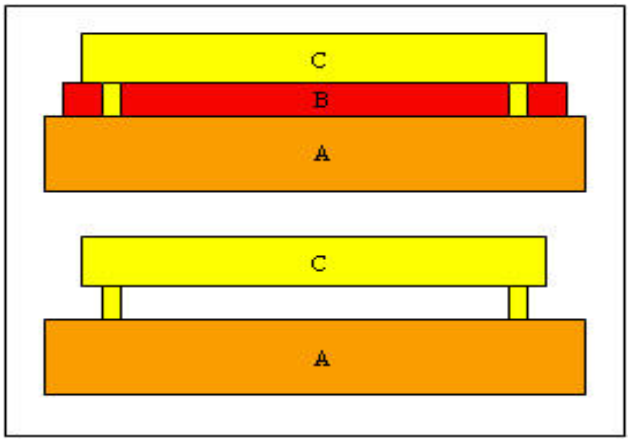

Figure 1: Surface micromachined sensor structure

The ADXL150 uses a capacitive measurement technique; the deflection of the inertial mass changes the capacitance between the finger beams and the adjacent cantilever beams. The sensor structure is surrounded by supporting electronics, which converts the capacitance changes due to acceleration into a voltage, with appropriate signal conditioning circuits. The differential capacitor sensor is composed of fixed plates and moving plates attached to the beam that moves in response to acceleration. The movement of the beam changes the differential capacitance, which is measured by the on chip circuitry. The proof mass (beam) is supported by tether, which serve as mechanical springs. The voltage on the moving plates is measured via the electrically conductive tether anchors. The simplified view of sensor under acceleration is shown in figure 2.

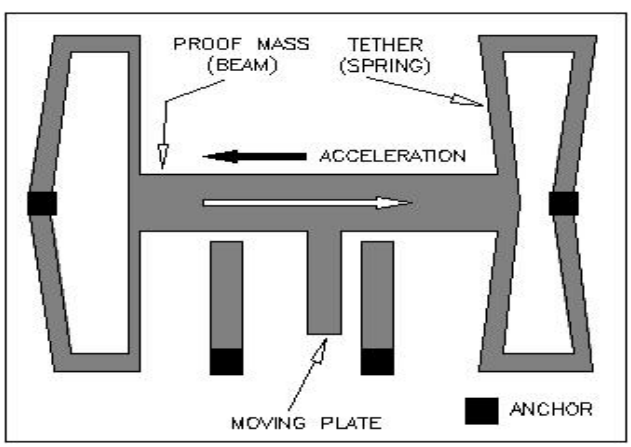

Figure 2: Simplified view of sensor under acceleration

3 CIRCUIT LEVEL DESIGN

The complete electronics circuit design is made on a single printed circuit board (PCB) with proper mechanical slots for mounting with the mechanical housing. It consists of single axis accelerometer, ac coupling circuit, rms-to-dc converter and current loop converter circuit as shown in figure 3.

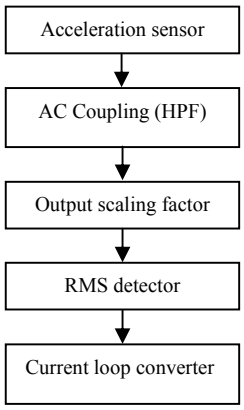

Figure 3: Block diagram of acceleration sensing transmitter.

The circuit components used are based on SMD ICs so that the overall size of the transmitter unit with mechanical assembly is small. The overall circuit is designed for 0-10g rms acceleration sensing, with current as the output of the circuit. It is a loop powered transmitter with 4-20mA current output corresponding to 0-10g rms acceleration input. There is no separate power supply for neither sensors or any other ICs. The internal current loop circuit supplies power for all the ICs. The design aspects of various parts of the accelerometer are discussed in the following sections.

3.1 Acceleration Sensor

The ADXL150, a single axis MEMS accelerometer is used as an acceleration sensor which measures accelerations that result from an applied force. Its typical signal-to-noise ratio is 80 dB with resolution of signals as low as 10mg. For full scale range of ± 50g, the sensitivity S is 38mV/g and the frequency bandwidth is dc to 1000Hz. The sensitivity of the chip is the output voltage change per g unit of acceleration applied, specified at the V_O pin in mV/g. The output voltage, V_O of the sensor is a function of both the acceleration input (g) and the power supply voltage (Vs) as given by equation (1).

$$V_O = V_S / 2 - \left(S * g * V_S / 5\right) \quad (1)$$

The accelerometer chips need to be physically positioned and aligned in a manner which allows the desired acceleration to be measured. The pin configurations are given in the IC datasheet [1]. The full scale (FS) acceleration range considered here is ± 10g. The full scale

range can be set by the resistor values of 1MΩ, 332kΩ, and 249kΩ for the FS range of ± 25g, ± 12.5g and ± 10g respectively.

3.2 AC Coupling Circuit

The AC coupling used for vibration measurement, is employed between the ADXL150 accelerometer' output and the external op amp's input. The series combination of capacitor and resistor together form a high pass filter (HPF) with corner frequency given by equation (2).

$$f_c = 1/\left(2\pi R_2 C_3\right) \tag{2}$$

The high pass filter (or ac coupling) reduces the signal from the accelerometer by 3 dB at the corner frequency (fc) and it continues to reduce it at a rate of 20 dB per decade for signals below the corner frequency. The corner frequency can be set by the proper selection of capacitor and the resistor combinations.

The most common corner frequencies are 1 Hz, 3 Hz, 10 Hz and 20 Hz. In case of velocity measurement, the preferred lower (corner) frequency considered is 10 Hz. For almost all the machinery, the frequency bandwidth of 1.5 Hz to 1000 Hz will catch all the normal vibrations. The acceleration sensor with AC coupling circuit is shown in figure 4.

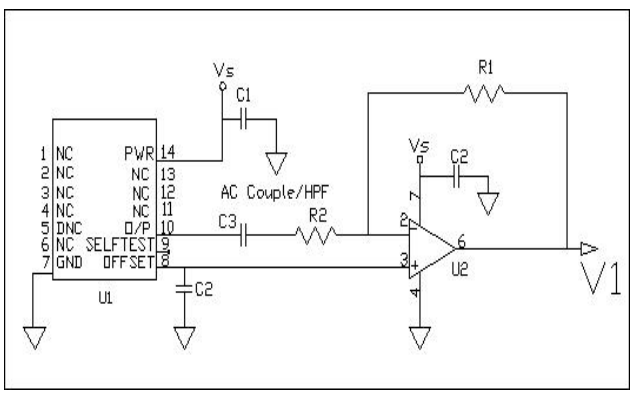

Figure 4: Acceleration sensor with AC coupling

The proper selection of accelerometers is needed to sense those high frequency vibrations. In this design, the corner frequency considered is 3 Hz. The value of the resistor is 249kΩ and capacitor is 0.22μF corresponding to this frequency. The output voltage V_1 is applied to the RMS detector circuit.

3.3 RMS Detector Circuit

The AD737 rms detector chip is employed to detect the root mean square value of acceleration. The AD737 is a low power, precision, true rms-to-dc converter. It can compute the rms value of both ac and dc input voltages. It is capable of measuring ac signals by operating as either average or a true rms-to-dc converter. The working principle of this chip is given. It computes the average absolute value of an ac voltage or current by full wave rectifying and low-pass filtering the input signal; this approximates the average. The resulting output, a dc average level, is then scaled by adding a scale factor to convert the dc average reading to an rms equivalent value for the waveform being measured. The rms detector circuit is as shown in figure 5.

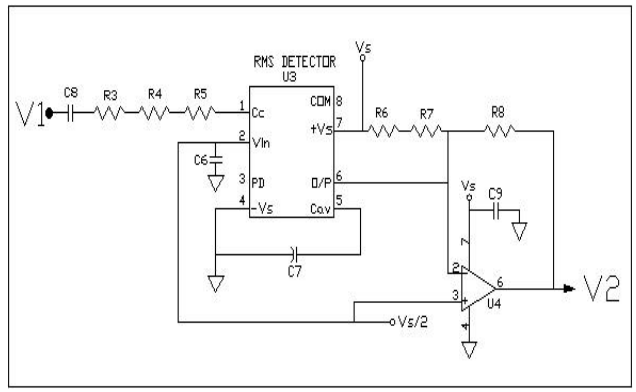

Figure 5: RMS-to-DC converter circuit

Both the ICs (U3, U4) are operated with positive power supply of 5 volt. Here, it is operated in ac coupled mode by addition of a single capacitor C8. The rms converter has two inputs namely a high impedance 1012Ω input at pin 2 and an 8kΩ, wide dynamic range input via pin 1. The rms converter's full scale input range is normally 200mV. The input scale factor (input range) is increased by adding an external resistance namely the resistors R3, R4 and R5. The AD737 (U3) rms converter drives an AD8541AR (U4) op amp with a negative-flowing output current. The op amp operates as a current to voltage converter and also inverts the signal. The resistor R8 value is equal to the effective external input resistance of the AD737 in order to make the input and output scaling factor to unity. The resistors R6 and R7 are used for output zero adjustment. The output voltage V_2 is fed as input to current loop circuit.

3.4 Current Loop Circuit

The output voltage of the rms detector section is fed to the current loop converter, shown in figure 6. The current loop circuit converts the input voltage (V_2) into loop current (I_L) of 4-20mA, which is the commonly used industrial standard current signal level. For minimum input voltage (corresponds to 0g rms), the current in the loop is 4mA and at maximum input voltage (corresponds to 10g rms), the loop current is 20mA. The output current is directly proportional to the input voltage, which is directly proportional to the input acceleration. The zero (4mA) adjustment is done by the series combination of the resistors R13, R14, R15 and R16. The span (20mA) adjustment is done by the series combination of the resistors R9, R10, R11 and R12.

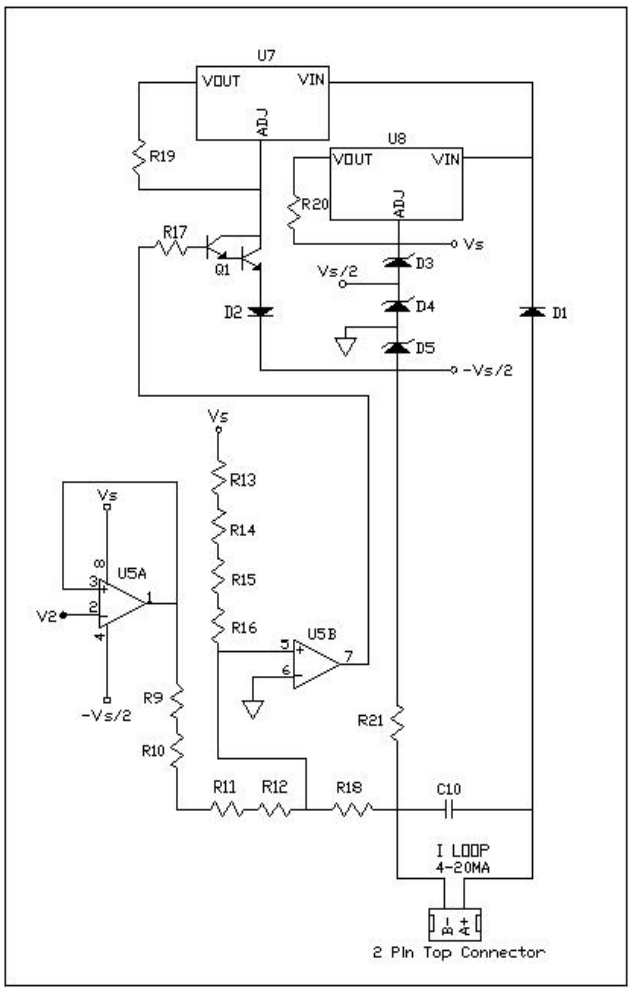

Figure 6: Current loop circuit

4 CALIBRATION PROCEDURE

The instrument must be powered properly with 24V DC without the sensor (IC U1). The calibration procedure for the complete PCB is described below.

4.1 DC Voltage to Current Loop Circuit

The DC input voltage is connected between IC U5's inverting input and ground terminal: The lower voltage (V_L) 0.0V for 0 g rms and higher voltage (V_H) 1.088V for 10g rms are applied and set the overall output current to 4 and 20 mA by adjusting zero & span resistors.

4.2 RMS Detector Section

Superimposed 2.5V DC with AC voltage is connected to C8: The AC voltage V_L rms and V_H rms are applied and set the IC U4's 6th pin output voltage to V_L DC and V_H DC by adjusting zero (R3, R4, R5) & span (R6, R7) resistors respectively.

4.3 Overall Section with AC Coupling

Superimposed 2.5V DC with AC voltage is connected to C3: the IC U2's 3 pin is shorted to IC D4's 8th pin: The V_L rms and V_H rms are applied and checked for the overall output current to 4 and 20 mA respectively.

5 CIRCUIT COMPONENTS

The ICs components employed are given in table.1.

Table 1: ICs description

Notation	ICs Description
U1	ADXL150AQC - ± 50g, Single Axis MEMS Capacitive Accelerometer
U2	OP196GS - Micro Power, Op Amp
U3	AD737JR - True RMS Converter
U4	AD8541AR- Micro Power, Op Amp
U5	OP296GS - Micro Power, Op Amp
Q1	BSP52T1-NPN Darlington amplifier
U7, U8	LM317M – Adjustable regulator
D1, D2	1N4001- SMD Diodes
D3, D4, D5	LM336D-2.5V - Precision Voltage Ref

6 PROTOTYPE

The prototype of an acceleration sensing transmitter was developed with other signal conditioning circuits. The size of the PCB card is approximately 44mm by 22mm. Two small slots are provided in the card which is used for mounting with the 2 pin top connector. The connector consists of two male pins (A & B); one is for signal/power (+ve) and the other for ground (-ve) connection. The connector has a diameter of 24mm, height of 23.5mm and has male threads of 5/8". The connector is specially designed with better precision to hold the card rigidly. The mechanical housing unit is provided with internal hole for holding the card and tapped hole (female threads ¼"-28UNF-2B) at the hexagon bottom for mounting the instruments. Its height is 59mm and diameter is 26.5mm. The overall product dimension is 26.5mm by 76mm.

7 CONCLUSION

The prototype of an industrial acceleration sensing transmitter was designed using MEMS capacitive accelerometer. The complete electronic circuit level design is described. These loop powered vibration transmitters are employed for vibration monitoring and control applications.

REFERENCES

[1] Analog Devices's iMEMS Accelerometers product datasheets "ADXL 150/250 Single & Dual Axis Accelerometers", http://www.analogdevices.com